Data Sheet

Article number: 03106004
Description: Fluro Rod End GAOW 4
Without bushing

Measures

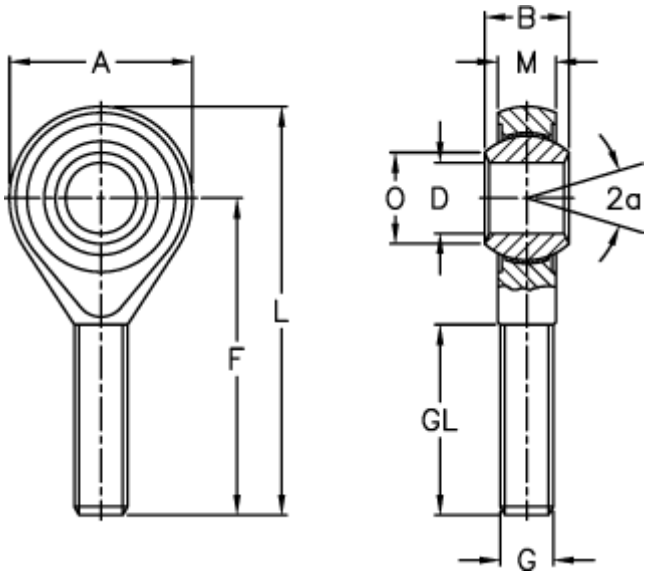

A	= 14	L	= 37
a (degrees)	= 14	M	= 5.25
B	= 7	O	= 6.5
D	= 4	Permissible rpm	= Ikke velegnet til rotation
Dynamic load C (kN)	= 0.8	Static load C0 (kN)	= 2.6
F	= 30	Weight (g)	= 9
g	= M4		
GL	= 19		

Product drawings and brochures of any kind may contain errors for which Brd. Klee A/S cannot be liable.